TRIO3-PS/1AC/24DC/20 - Power supply unit

1159039

https://www.phoenixcontact.com/ae/products/1159039

Please be informed that the data shown in this PDF document is generated from our online catalog. Please find the complete data in the user documentation. Our general terms of use for downloads are valid.



Primary-switched power supply unit, TRIO POWER, Push-in connection, DIN rail mounting, input: 1-phase, output: 24 V DC / 20 A, adjustable from 24 V DC ... 28 V DC

Product description

All TRIO POWER power supplies feature smart diagnostics with multicolor LEDs and a collective alarm contact. This is used to signal all relevant states such as DC OK, overload, and short circuit. Devices with integrated multi-channel device protection and an IO-Link interface for diagnostics and parameterization are optionally available. The compact devices reduce the installation work, space requirements in the control cabinet, and material costs. TRIO POWER power supplies therefore provide power reliability in one device.

Your advantages

- Space-saving due to its low overall width and capability of being mounted side by side
- Robust and reliable due to dynamic boost with a powerful output characteristic curve
- Easy handling with Push-in connection technology
- Smart diagnostics with multicolor LEDs and collective relay contact for a clear status display, with optional IO-Link
- High system availability: power reliability in one device due to the integrated compact multi-channel circuit breaker

Commercial data

Item number	1159039
Packing unit	1 pc
Minimum order quantity	1 pc
Sales key	CMP
Product key	CMPD13
GTIN	4063151166250
Weight per piece (including packing)	1,013 g
Weight per piece (excluding packing)	940 g
Customs tariff number	85044095
Country of origin	CN

Technical data

Input data

AC operation

Supply system configuration	Star network (TN, TT, IT (PE))
Nominal input voltage range	100 V AC ... 240 V AC
Input voltage range	100 V AC ... 240 V AC -15 % ... +10 %
	115 V AC ... 240 V AC ±10 % (UL)
Derating	< 100 V AC (1 %/V)
	2.5 %/K, > 60 °C
Typical national grid voltage	120 V AC
	230 V AC
Voltage type of supply voltage	AC
Inrush current	< 21 A (25 °C)
Inrush current integral (I^2t)	< 1.091 A^2s
Frequency range (f_N)	50 Hz ... 60 Hz ±10 %
Mains buffering time	typ. 23 ms (120 V AC)
	typ. 24 ms (230 V AC)
Current consumption	5.3 A (100 V AC)
	4.4 A (120 V AC)
	2.3 A (230 V AC)
	2.15 A (240 V AC)
Protective circuit	Transient protection; Varistor
Power factor (cos phi)	0.96 (230 V AC)
Device mains fuse	10 A internal (device protection)
Recommended breaker for input protection	6 A ... 16 A (Characteristic B, C, D, K or comparable)
Discharge current to PE	< 3.5 mA

DC operation

Input voltage range	100 V DC ... 240 V DC ±10 %
	160 V DC ... 240 V DC ±10 % (UL)
Derating	< 140 V DC (1 %/V)
Current consumption	5.2 A (100 V DC)
	2.1 A (240 V DC)

Output data

Efficiency	typ. 93.8 % (120 V AC)
	typ. 95 % (230 V AC)
Nominal output voltage	24 V DC
Setting range of the output voltage (U_{Set})	24 V DC ... 28 V DC (> 24 V DC, constant capacity restricted)
Nominal output current (I_N)	20 A
Dynamic Boost ($I_{Dyn.Boost}$)	max. 30 A (5 s)
Short-circuit-proof	yes

No-load proof	yes
Derating	60 °C ... 70 °C
Crest factor	typ. 1.77 (120 V AC)
	typ. 1.6 (230 V AC)
Output power (P_N)	480 W
Output power ($P_{Dyn. Boost}$)	max. 720 W (5 s)
Connection in parallel	yes, for increased efficiency and redundancy
Connection in series	yes, for increased output voltage (observe SELV limit)
Feedback voltage resistance	≤ 35 V DC
Protection against overvoltage at the output (OVP)	≤ 35 V DC
Residual ripple	typ. 50 mV_{PP} (with nominal values)
Control deviation	< 1 % (change in load, static 10 % ... 90 %)
	< 3 % (change in load, dynamic 10 % ... 90 %)
	< 0.1 % (change in input voltage ±10 %)
Rise time	≤ 1 s (U_{Out} = 10 % ... 90 %)
Minimum no-load power dissipation	< 1.3 W (120 V AC)
Maximum no-load power dissipation	< 1.37 W (230 V AC)
Minimum nominal load power dissipation	< 33.37 W (120 V AC)
Power loss nominal load max.	< 26.72 W (230 V AC)
Integrated fuse protection	no

Connection data

Input

Position	1.x

Connection technology

Position marking	1.1 (L/+), 1.2 (N/-), 1.3 (

Conductor connection

Connection method	Push-in connection
rigid	0.2 mm² ... 4 mm²
	1.5 mm² (recommended)
flexible	0.2 mm² ... 2.5 mm²
	1.5 mm² (recommended)
flexible with ferrule without plastic sleeve	0.25 mm² ... 2.5 mm²
	1.5 mm² (recommended)
flexible with ferrule with plastic sleeve	0.25 mm² ... 2.5 mm²
	1.5 mm² (recommended)
AWG	24 ... 12 (Cu)
	16 (recommended)
Stripping length	10 mm (Rigid/flexible/ferrule)

Output

Position	2.x

Connection technology

Position marking	2.1, 2.2 (+), 2.3, 2.4, 2.5 (-)

Conductor connection

Connection method	Push-in connection
rigid	0.2 mm² ... 10 mm²
	4 mm² (recommended)
flexible	0.2 mm² ... 6 mm²
	4 mm² (recommended)
flexible with ferrule without plastic sleeve	0.25 mm² ... 6 mm² (Cu)
	4 mm² (recommended)
flexible with ferrule with plastic sleeve	0.25 mm² ... 6 mm²
	4 mm² (recommended)
AWG	24 ... 8 (Cu)
	12 (recommended)
Stripping length	12 mm (Rigid/flexible/ferrule)

Signal

Position	3.x

Connection technology

Position marking	3.1 (13), 3.2 (14)

Conductor connection

Connection method	Push-in connection
rigid	0.2 mm² ... 1.5 mm²
	0.5 mm² (recommended)
flexible	0.2 mm² ... 1.5 mm²
	0.5 mm² (recommended)
flexible with ferrule without plastic sleeve	0.25 mm² ... 1.5 mm² (Cu)
	0.5 mm² (recommended)
flexible with ferrule with plastic sleeve	0.25 mm² ... 0.75 mm²
	0.5 mm² (recommended)
AWG	24 ... 16 (Cu)
	20 (recommended)
Stripping length	10 mm (Rigid/flexible/ferrule)

Signaling

LED signaling

Types of signaling	LED DC OK – signal state operation (U_N = 24 V DC, I_{Out} = I_N)
Function	Visual operating state display
Color	red, yellow, green (multicolor LED)
LED off	Supply voltage input AC not present (Off)
LED on (green), DC OK	U_{Out} > 21 V DC and I_{Out} < 0.9 x I_N (On (green), DC OK)
LED on (yellow), IOut > 90%	U_{Out} > 21 V DC and I_{Out} > 0.9 x I_N (On (yellow), I_{Out} > 90%)

LED on (red), ISHORT	U_{Out} < 21 V DC and I_{Out} > 0.9 x I_N (On (red), I_{SHORT})
LED on (flashing red) OVP	U_{OUT} > OVP (Over voltage protection) (On (flashing red))

Signal output DC OK

Position	3.x
Type of signaling	DC OK switch contact - signal state operation (U_N = 24 V DC, I_{Out} = I_N)
Position marking	3.1 (13), 3.2 (14)
Function	Operating state forwarding
Switch contact (floating)	OptoMOS
Switching voltage	max. 30 V DC (SELV)
Current carrying capacity	max. 100 mA
State condition	U_{Out} > 21 V DC and I_{Out} < 0.9 x I_N (Contact closed)
	U_{Out} < 21 V DC or I_{Out} > 0.9 x I_N (averaging over 60 s) (Contact open)

Electrical properties

Number of phases	1.00
Insulation voltage input/output	5.3 kV DC (type test)
	3.1 kV DC (routine test)

Product properties

Product type	Power supply
Product family	TRIO POWER
MTBF (IEC 61709, SN 29500)	> 1400000 h (25 °C)
	> 770000 h (40 °C)
	> 310000 h (60 °C)
Environmental protection directive	RoHS Directive 2011/65/EU
	WEEE
	Reach

Insulation characteristics

Protection class	I
Degree of pollution	2

Dimensions

Item dimensions

Width	55 mm
Height	135 mm
Depth	132 mm
	125 mm (Device depth (DIN rail mounting))

Installation dimensions

Installation distance right/left	0 mm / 0 mm
Installation distance top/bottom	50 mm / 50 mm

Mounting

Mounting type	DIN rail mounting
Assembly note	alignable: 0 mm horizontally, 30 mm vertically
Mounting position	horizontal DIN rail NS 35, EN 60715
With protective coating	no

Material specifications

Flammability rating according to UL 94	V0 (Housing, terminal blocks)
Hood version	Polycarbonate
Side element version	Aluminum

Environmental and real-life conditions

Ambient conditions

Degree of protection	IP20
Ambient temperature (operation)	-25 °C ... 70 °C (> 60 °C Derating: 2,5 %/K)
Ambient temperature (storage/transport)	-40 °C ... 85 °C
Ambient temperature (start-up type tested)	-40 °C
Maximum altitude	≤ 5000 m (> 2000 m, Derating: 10 %/1000 m)
Max. permissible relative humidity (operation)	≤ 95 % (at 25 °C, non-condensing)
Shock (operation)	18 ms, 30g, per spatial direction (IEC 60068-2-27)
Vibration (operation)	10 Hz ... 50 Hz, amplitude ±0.2 mm (IEC 60068-2-6)
	50 Hz ... 150 Hz, 2.3g, 90 min.
Temp code	T4 (-25 ... +70 °C; > 60 °C, Derating: 2,5 %/K)

Standards and regulations

Overvoltage category

EN 61010-1	III (≤ 2000 m)
	II (≤ 5000 m)

Overvoltage category

EN 61010-2-201	III (≤ 2000 m)
	II (≤ 5000 m)

Safety of power supply units up to 1100 V (insulation distances)

Standard designation	Safety of power supply units up to 1100 V (insulation distances)
Standards/specifications	DIN EN 61558-2-16

Electrical safety

Standard designation	Electrical safety
Standards/specifications	IEC 61010-2-201 (SELV)

Safety for measurement, control, and laboratory equipment

Standard designation	Safety for equipment for measurement, control, and laboratory use
Standards/specifications	IEC 61010-1

Protective extra-low voltage

Standard designation	Protective extra-low voltage
Standards/specifications	IEC 61010-1 (SELV)
	IEC 61010-2-201 (PELV)

Safe isolation

Standard designation	Safe isolation
Standards/specifications	IEC 61558-2-16
	IEC 61010-2-201

Limitation of harmonic line currents

Standard designation	Limitation of harmonic line currents
Standards/specifications	EN 61000-3-2

Mains variation/undervoltage

Standard designation	Mains variation/undervoltage
Standards/specifications	SEMI F47
	EN 61000-4-11

Approvals

UL

Identification	UL/C-UL Listed UL 61010-1

UL

Identification	UL/C-UL Listed UL 61010-2-201

ANSI/UL 121201

Identification	PROCESS CONTROL EQUIPEMENT FOR HAZARDOUS LOCATIONS
	(EN) • This equipment is suitable for use in Class I, Division 2, Groups A, B, C and D, Hazardous Locations, or non-hazardous locations only. (FR) • Cet appareil convient uniquement pour une utilisation en atmosphères explosibles de classe I, division 2, groupes A, B, C et D ou en atmosphères non explosibles.
	(EN) • WARNING: Explosion Hazard - Do not connect or disconnect equipment unless power has been switched off or the area is known to be non-hazardous. (FR) • AVERTISSEMENT : risque d'explosion - ne pas connecter ou déconnecter les équipements sauf si l'alimentation a été coupée ou si la zone est réputée non dangereuse.
	(EN) • If the equipment is used in a manner not specified by the manufacturer, the protection provided by the equipment may be impaired. (FR) • Si l'équipement est utilisé d'une manière non spécifiée par le fabricant, la protection fournie par cet équipement peut être altérée.

	(EN) • This equipement must be installed in a suitable, tool secured/key locked enclosure. (FR) • Cet équipement doit être installé dans un boîtier approprié, verrouillé par une clé ou dont l'ouverture nécessite l'utilisation d'un outil.

EMC data

Electromagnetic compatibility	Conformance with EMC Directive 2014/30/EU
Low Voltage Directive	Conformance with Low Voltage Directive 2014/35/EC
Interference emission	Interference emission in accordance with EN 61000-6-3 (residential and commercial) and EN 61000-6-4 (industrial)
Noise immunity	Immunity in accordance with EN 61000-6-1 (residential), EN 61000-6-2 (industrial)
Conducted noise emission	EN 55016
	EN 61000-6-3 (Class B)
Noise emission	EN 55016
	EN 61000-6-3 (Class B)

Harmonic currents

Standards/regulations	EN 61000-3-2
	EN 61000-3-2 (Class A)
Frequency range	0 kHz ... 2 kHz

Flicker

Standards/regulations	EN 61000-3-3
	EN 61000-3-3
Frequency range	0 kHz ... 2 kHz

Electrostatic discharge

Standards/regulations	EN 61000-4-2

Electrostatic discharge

Contact discharge	6 kV (Test Level 3)
Discharge in air	8 kV (Test Level 3)
Comments	Criterion B

Electromagnetic HF field

Standards/regulations	EN 61000-4-3

Electromagnetic HF field

Frequency range	80 MHz ... 1 GHz
Test field strength	10 V/m (Test Level 3)
Frequency range	1 GHz ... 6 GHz
Test field strength	10 V/m (Test Level 3)
Comments	Criterion A

Fast transients (burst)

Standards/regulations	EN 61000-4-4

Fast transients (burst)

Input	asymmetrical 2 kV (Test Level 3)
Output	asymmetrical 2 kV (Test Level 3)
Signal	asymmetrical 1 kV (Test Level 3)
Comments	Criterion A

Surge voltage load (surge)

Standards/regulations	EN 61000-4-5

Surge voltage load (surge)

Input	symmetrical 1 kV (Test Level 3)
	asymmetrical 2 kV (Test Level 3)
Output	symmetrical 0.5 kV (Test Level 2)
	asymmetrical 1 kV (Test Level 2)
Signal	asymmetrical 1 kV (Test Level 2)
Comments	Criterion B

Conducted interference

Standards/regulations	EN 61000-4-6

Conducted interference

I/O/S	asymmetrical
Frequency range	0.15 MHz ... 80 MHz
Comments	Criterion A
Voltage	10 V (Test Level 3)

Voltage dips

Standards/regulations	EN 61000-4-11
Voltage	230 V AC
Frequency	50 Hz
Voltage dip	70 %
Number of periods	25 periods
Additional text	Class 3
Comments	Criterion A
Voltage dip	40 %
Number of periods	10 periods
Additional text	Class 3
Comments	Criterion A
Voltage dip	0 %
Number of periods	1 period
Additional text	Class 3
Comments	Criterion A

Criteria

Criterion A	Normal operating behavior within the specified limits.
Criterion B	Temporary impairment to operational behavior that is corrected

	by the device itself.
Criterion C	Temporary adverse effects on the operating behavior, which the device corrects automatically or which can be restored by actuating the operating elements.

Drawings

Diagram

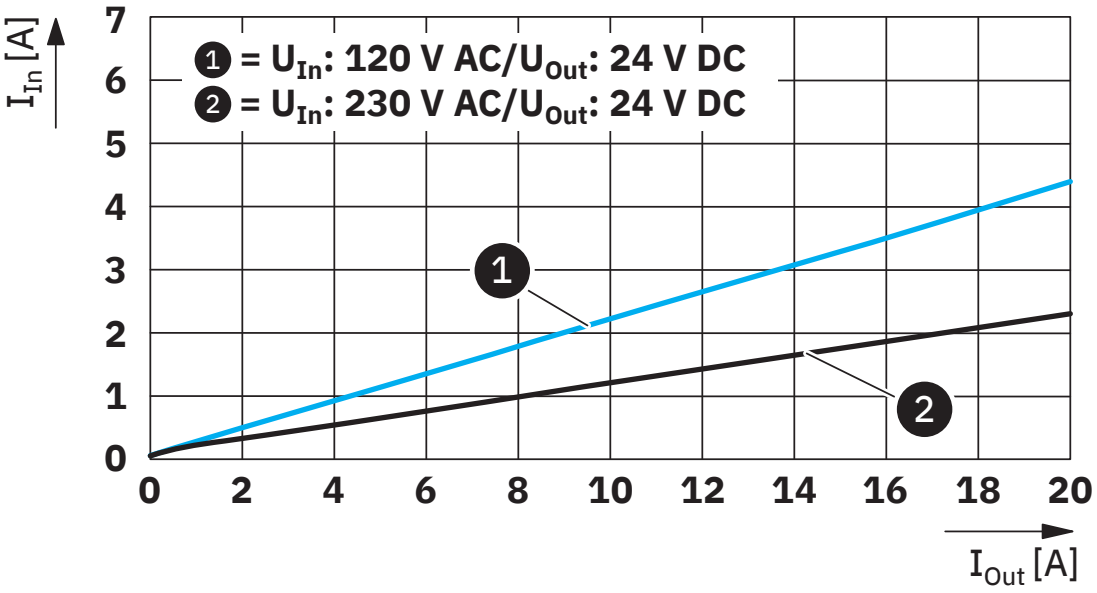

Input current/output current

Diagram

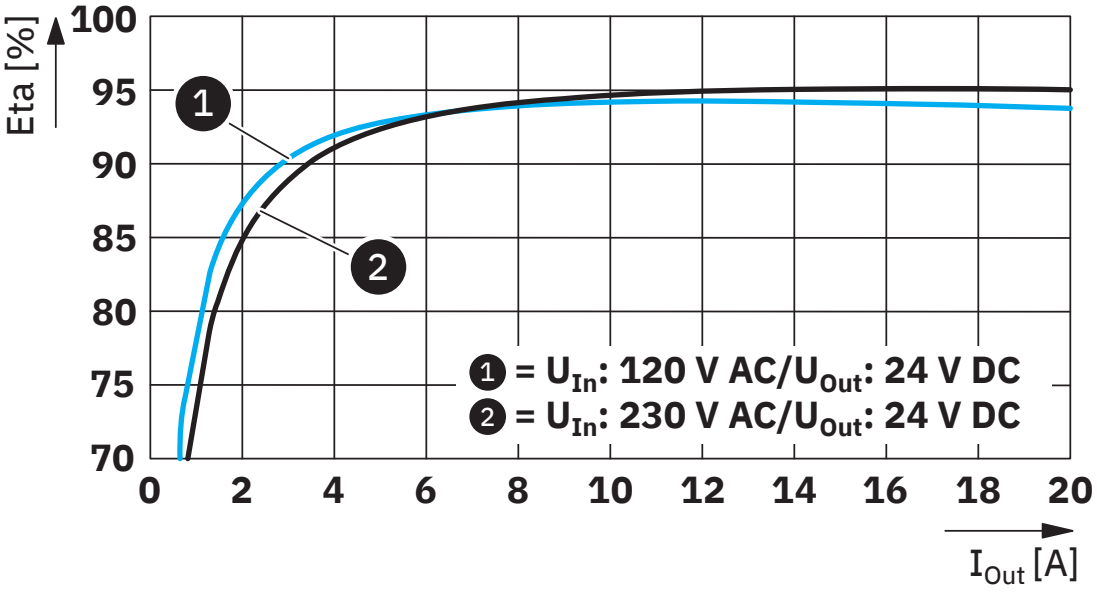

Efficiency

Dimensional drawing

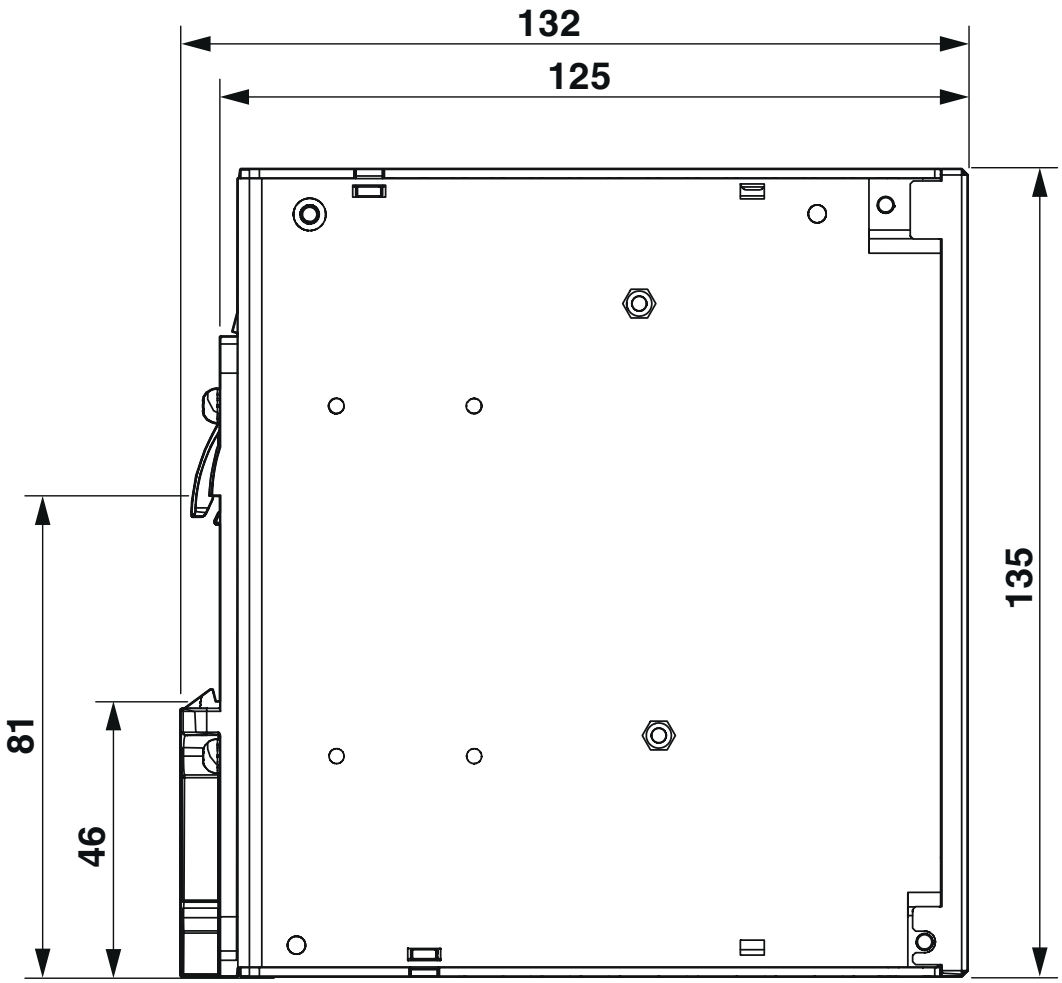

Device dimensions (dimensions in mm)

Diagram

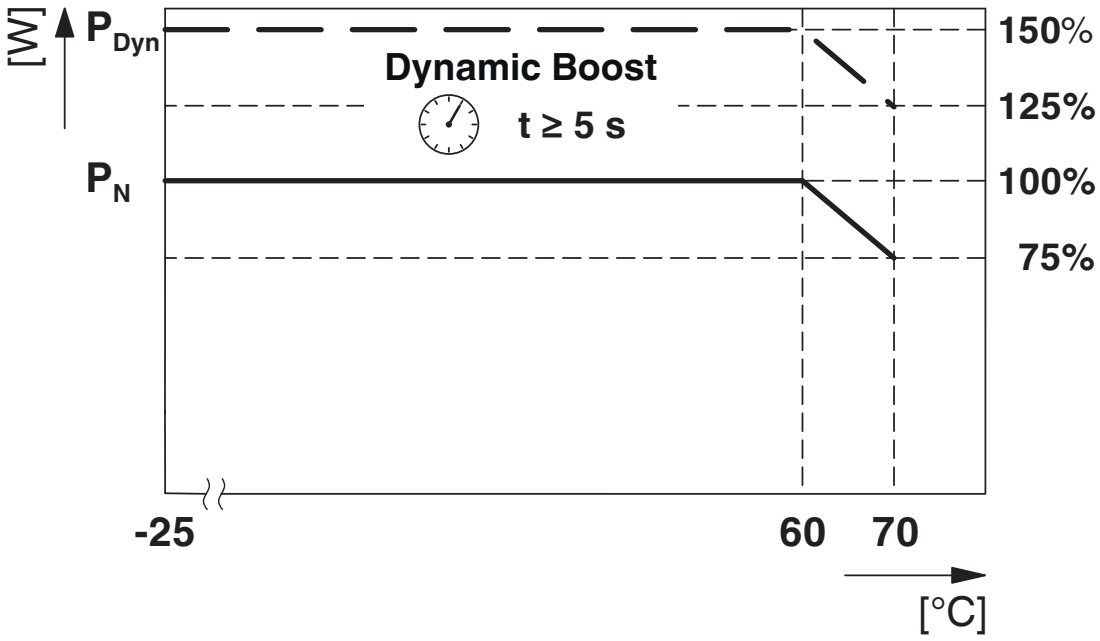

Temperature-dependent derating

Diagram

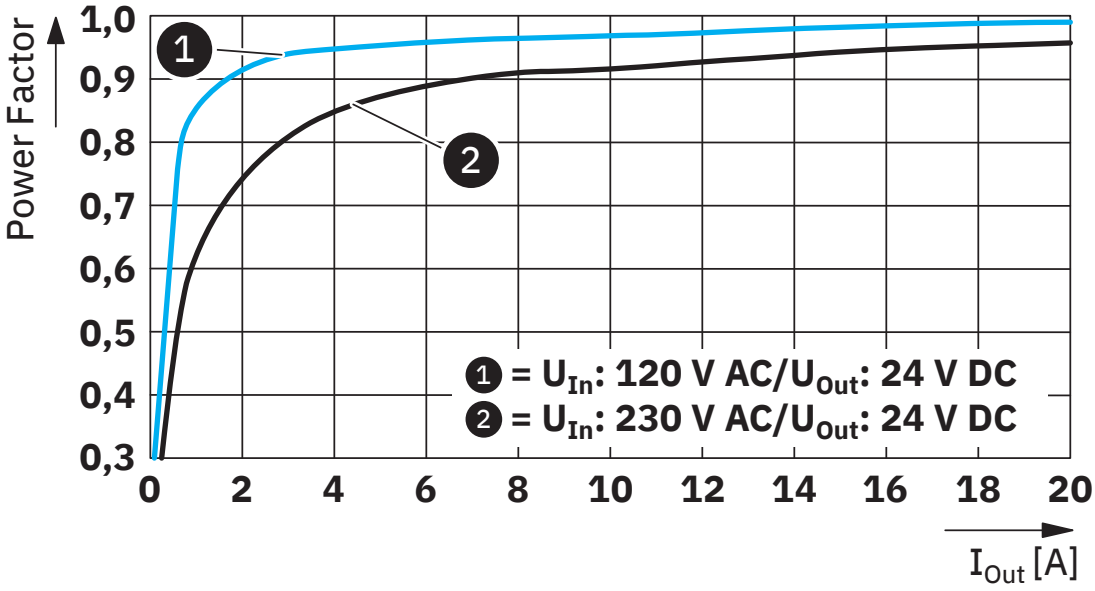

Power factor

Schematic diagram

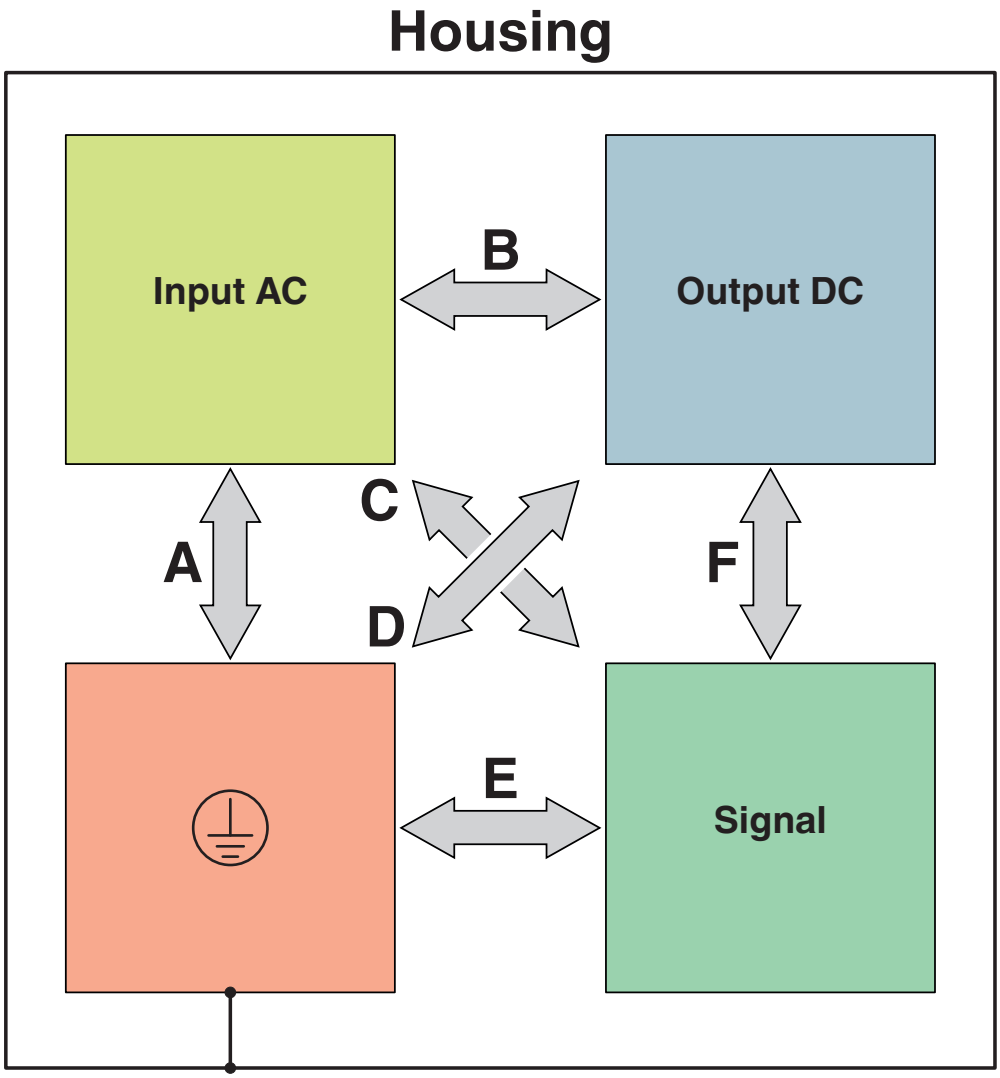

Test sections, insulation voltage

Dimensional drawing

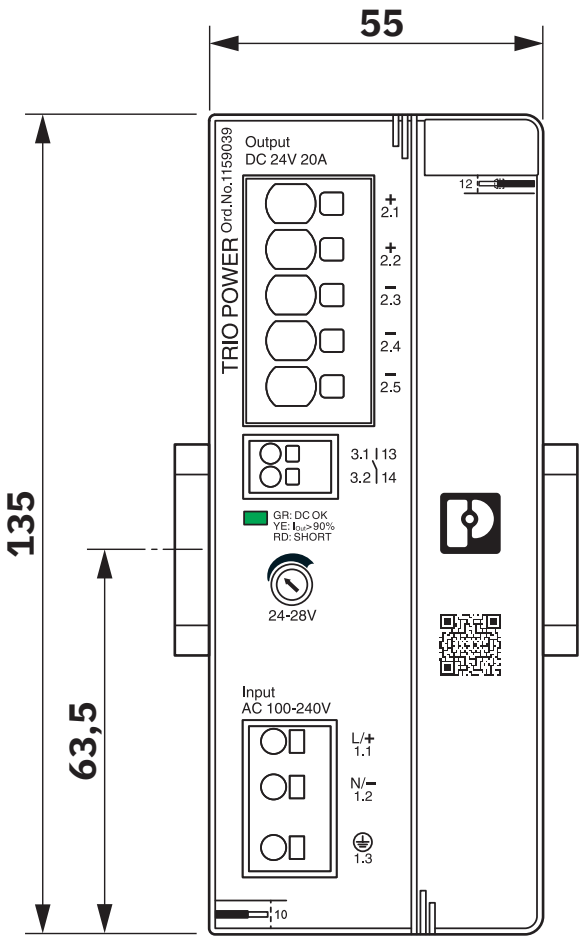

Device dimensions (dimensions in mm)

Diagram

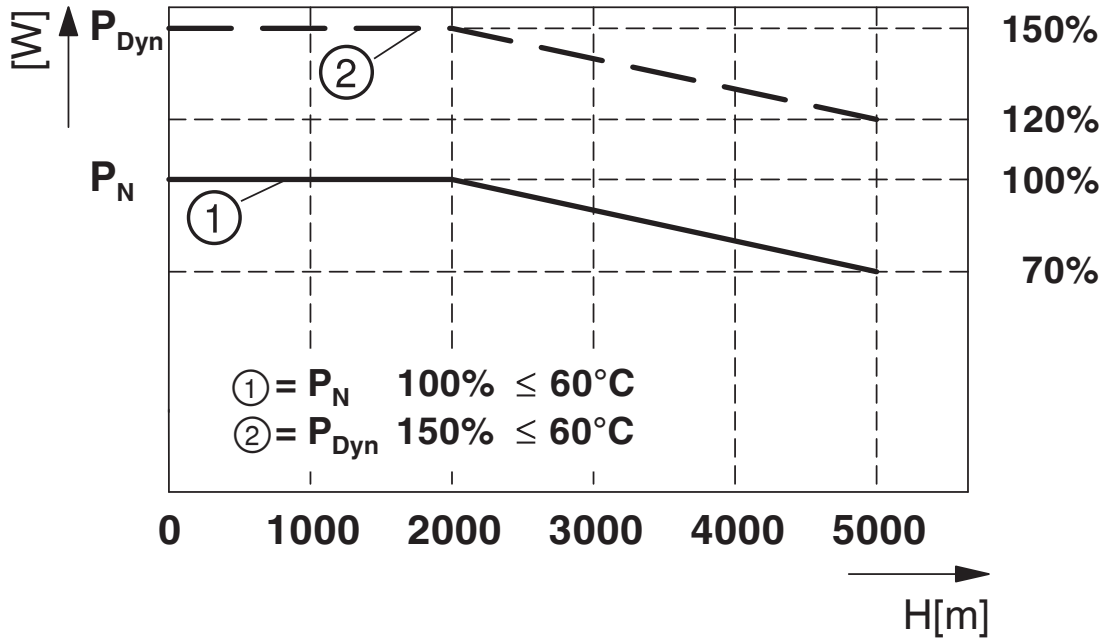

Altitude-dependent derating

Block diagram

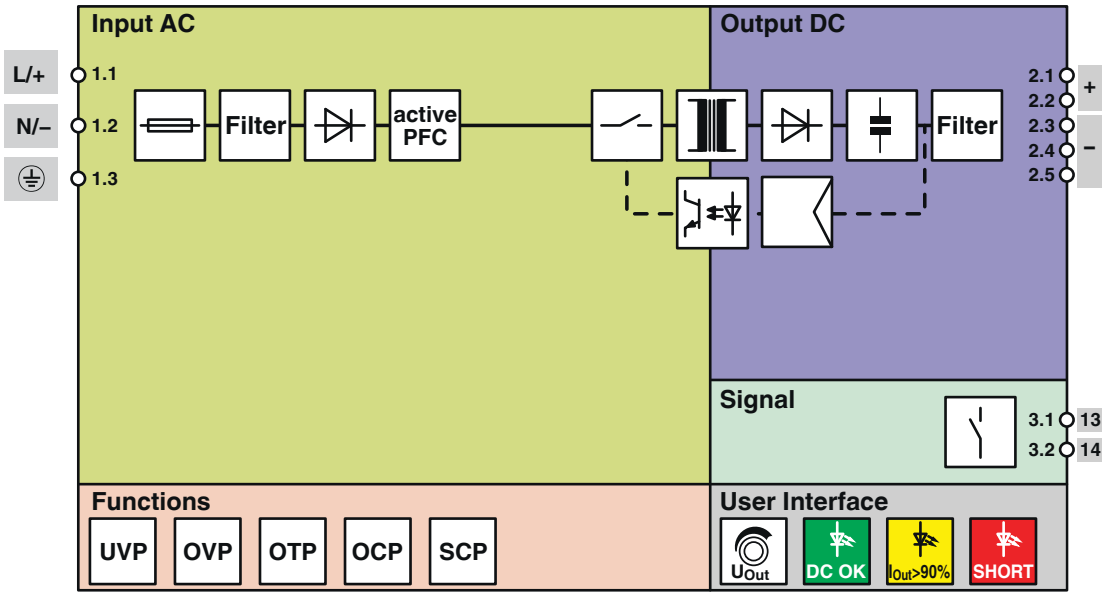

Block diagram

Approvals

To download certificates, visit the product detail page: https://www.phoenixcontact.com/ae/products/1159039

cULus Listed
Approval ID: E123528-20220207

DNV
Approval ID: TAA00000BM

CoC / Compliance Statement
Approval ID: C211-0021/23

CoC / Compliance Statement
Approval ID: C223-0007/23

cULus Listed
Approval ID: E199827-20220214

Classifications

ECLASS

ECLASS-11.0	27040701
ECLASS-12.0	27040701
ECLASS-13.0	27040701

ETIM

ETIM 9.0	EC002540

Environmental product compliance

EU RoHS

Fulfills EU RoHS substance requirements	Yes
Exemption	7(a), 7(c)-I

China RoHS

Environment friendly use period (EFUP)	EFUP-25
	An article-related China RoHS declaration table can be found in the download area for the respective article under "Manufacturer declaration". For all articles with EFUP-E, no China RoHS declaration table issued and required.

EU REACH SVHC

REACH candidate substance (CAS No.)	Lead(CAS: 7439-92-1)
SCIP	0acaf89d-a2fc-4a7a-ae52-febcb291507e

Phoenix Contact 2024 © - all rights reserved
https://www.phoenixcontact.com

PHOENIX CONTACT Middle East FZ LLC
1201N-1206N, Dubai Science Park Towers – North
P.O. Box 345002, Dubai, United Arab Emirates
(+971) 4 437-0324
info-me@phoenixcontact.com